```
************************************************************
*      Infineon     Technologies AG
*      GUMMEL-POON  MODEL  IN     SPICE  2G6    SYNTAX
*      VALID  UP    TO     6      GHZ
*      >>>    BFR460L3     <<<
*      (C)    2009   Infineon     Technologies AG
*      Version 0.9  November     2009
************************************************************
* - Please use the global SPICE parameter TEMP to set the junction
*   temperature of this device in your circuit to get correct DC
*   simulation results.
* - TEMP is calculated by TEMP=TA+P*(RthJS+RthSA). The junction
*   temperature TEMP is the sum of the ambient temperature TA and
*   the increment of temperature caused by the dissipated power
*   P=VCE*IC (IC collector current, VCE collector-emitter voltage).
* - RthJS is the thermal resistance between the junction and the
*   soldering point. RthJS for this device is 210 K/W. RthSA is the
*   thermal resistance of the PCB, from the soldering point to the
*   ambient. For determination of RthSA please refer to Infineon's
*   Application Note "Thermal Resistance Calculation" AN077.
* - The model has been verified in the junction temperature range
*   -25°C to +125°C.
* - TNOM=25 °C is the nominal ambient temperature.
*   Please do not change this value.
************************************************************
```

Package model

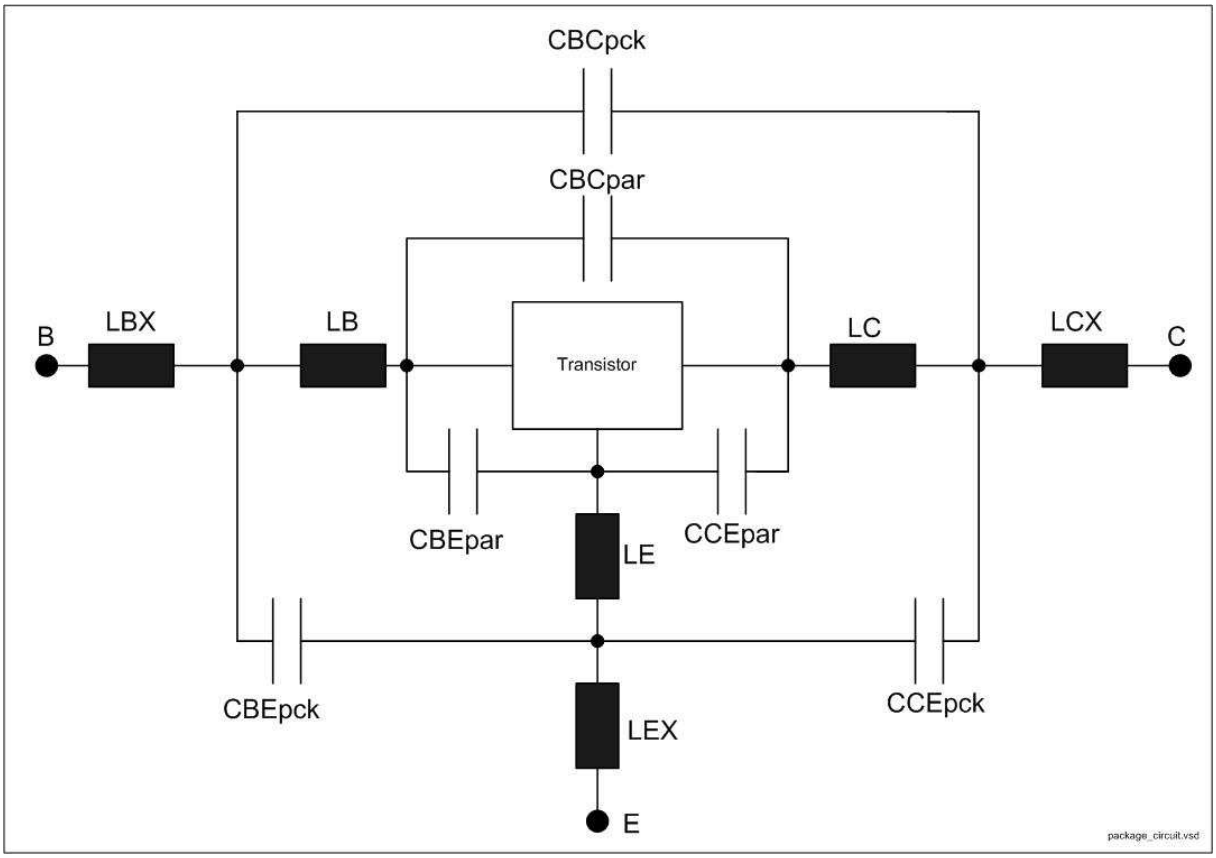

To import the SPICE-Model in MWO (Microwave Office from AWR) the following procedure is to be done:
Store the MWO-file. Right mouse click on Circuit Schematic, then select Import Schematic and go to the folder where the MWO-file (schematic) of the device has been stored and select the *.sch file. Then click OPEN.

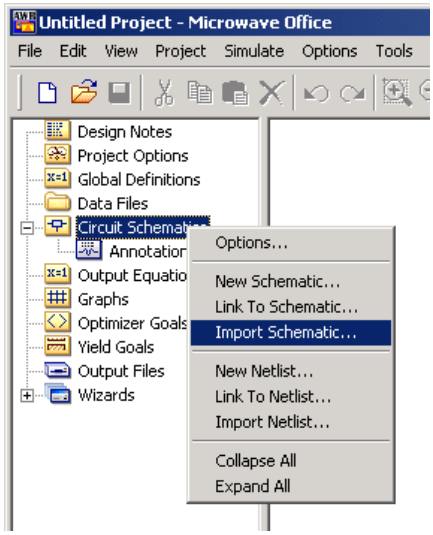

To import the SPICE-Model in ADS the following procedure is to be done:
Store the dsn-file. Open ADS, goto File -> Copy Design… -> set the path of the folder where the dsn-file (schematic) of the device has been stored and select the "*.dsn" file.
Set also the path of your current project. Then click OK.

